AUTODESK

Front view

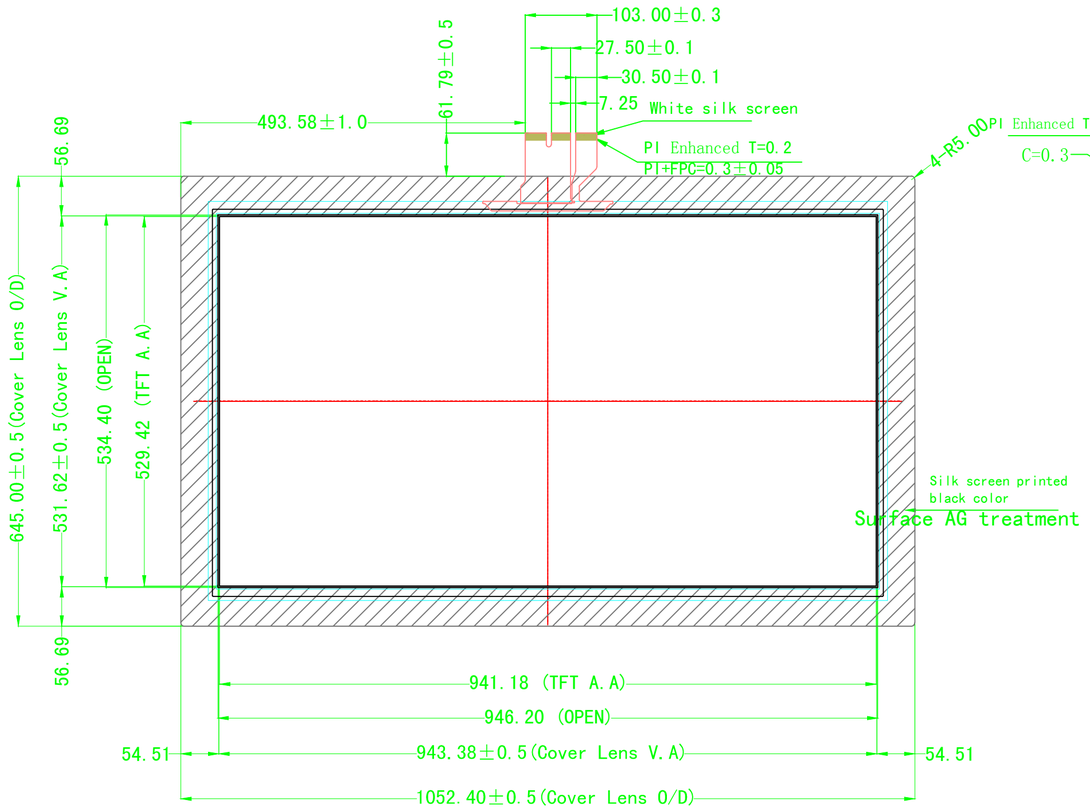

Side view

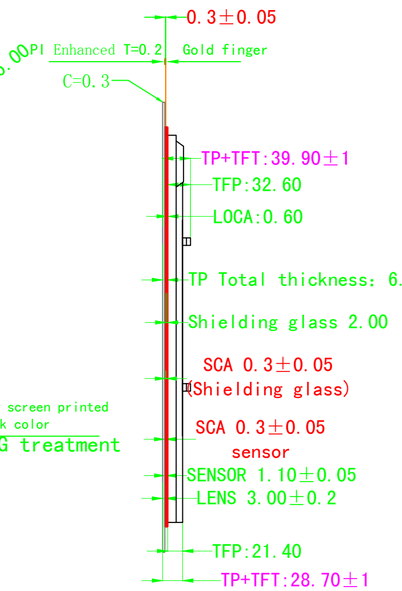

Back view

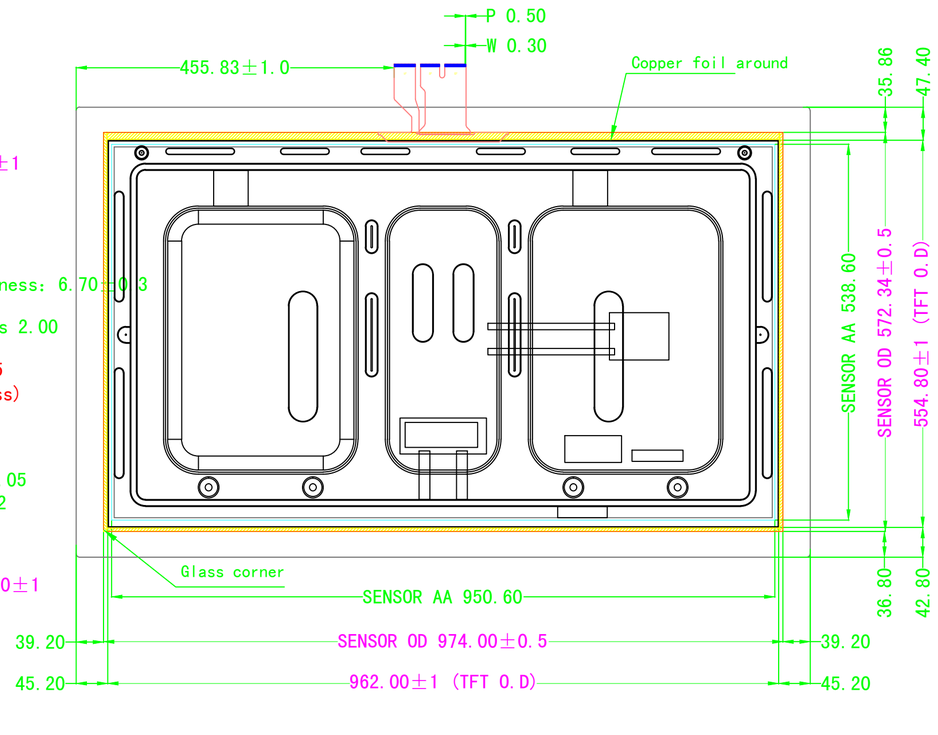

Technical Spec:

1.COVER LENS : Physical strength tempered glass, Surface AG treatment,
(Gloss 60-100) (Transmittance≥85%) (Haze2-6%)
2.Interface : FPC USB;
3.IC:EXC80H100;
4.Surface hardness≧7H;
5.Transmittance ≧ 82%P ;
6. Common tolerance ±1.0mm;
7. Follow RoHS standard;
8. Operating Temperature:-20℃~+70℃
9. Storage Temperature:-30℃~+80℃ ;

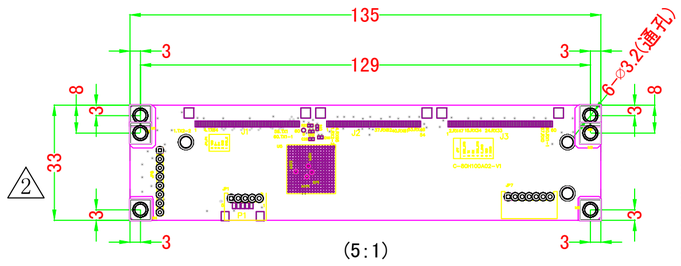

PIN	Define
1	GNDE
2	GNDIN
3	D+
4	D-
5	VDD/5V

TP DRAWING		TECHNICA HOUSE INC.			
Sheet	1 of 1	Model NO.		TEC-Q430155A-G2	
UNIT	mm	CUSTOMER P/N		43″	
Rev.	A2	Designed	BRIAN	Date	2020-03-27
Scale	FIT	Checked	JP Lin	Date	2020-03-27
		Approved		Date	

AUTODESK